[*Reprinted from* THE AERONAUTICAL JOURNAL OF THE ROYAL AERONAUTICAL SOCIETY, *OCTOBER 1993*]

A study of mechanical flapping-wing flight

J. D. DELAURIER
Institute for Aerospace Studies,
University of Toronto,
Downsview, Ontario, Canada

and J. M. HARRIS
Battelle Memorial Institute
Columbus, Ohio, USA

PRINTED BY MANOR PARK PRESS LIMITED, EDISON ROAD, HAMPDEN PARK, EASTBOURNE, SUSSEX, ENGLAND
AND PUBLISHED BY THE ROYAL AERONAUTICAL SOCIETY, 4 HAMILTON PLACE, LONDON W1V 0BQ, ENGLAND

A study of mechanical flapping-wing flight

J. D. DeLAURIER
Institute for Aerospace Studies,
University of Toronto,
Downsview, Ontario, Canada

and J. M. HARRIS
Battelle Memorial Institute
Columbus, Ohio, USA

ABSTRACT

The feasibility of mechanical flapping-wing flight has been studied by analyses and experiments. The key results from this work include the development of an efficient wing with unique features for twisting and lift balance, as well as a lightweight and reliable drive mechanism. These were incorporated into a radio-controlled, engine-powered, flapping-wing aeroplane (ornithopter), whose flight tests have been the proof-of-concept focus of this research. In September 1991, this aircraft achieved successful sustained flights, demonstrating the practicability of this particular solution for mechanical flapping-wing flight.

NOMENCLATURE

b	wingspan
$C_{L\theta}$	local lift-curve slope wrt flapping axis angle
c	local chord
y	spanwise coordinate
ξ	chordwise distance from a fixed reference point to the local aerodynamic centre
x_{ac}	chordwise distance from the reference point to the wing's aerodynamic centre

INTRODUCTION

The purpose of this work has been to assess the feasibility of mechanical, powered, flapping-wing aircraft. These are called "ornithopters", which means "bird like wing". The authors have interpreted this definition to mean that, although such an aircraft need not look like a bird *per se*, its means of flight are clearly bird like, even to a casual observer. Therefore, tail first (canard) or multiwing insect like configurations were excepted. Further, it was judged important that the flapping wings should provide all of the thrust and nearly all of the lift. Thus, exception was also taken to configurations where the flapping surfaces provide thrust only (like a propeller), and fixed wings provide the lift. All of the above designs have been called "ornithopters" by their builders, but only those which meet the "bird like wing" definition will be referenced and discussed.

Although nature's flapping-wing examples had been humanity's original inspiration for achieving flight, the successful mechanical realisation of this has been limited largely to small rubber-powered ornithopters built by aeromodellers[1], which all derive from the 1874 model flown by Alphonse Pénaud[2]. A current commercial example of this is the "Tim Bird" (Figure 1) which, like Pénaud's, uses a twisted rubber band operating a crank system to flap the wing spars.

A more sophisticated series of rubber-powered ornithopters were built by von Holst[3] for his study of bird flight. These have a very intricate stick and tissue construction, with a drive mechanism incorporating an eccentric drum which varies the supplied moment to the flapping wings. Therefore, maximum flapping forces are applied to the wings when needed during the cycle.

As for motorised flapping models, successful examples are few and sparsely documented. Those that warrant particular mention are the engine-powered ornithopters designed by Percival Spencer (reported by Dwiggins[4]) and David Atkins (reported by Brooks, *et al*[5]). However, no design details or performance figures were given.

A notable exception is the 18 ft-span robot pterosaur designed and constructed by AeroVironment of Monrovia, California[5]. This remarkable aircraft, with its computerised stability

Figure 1. "Tim Bird" rubber powered model ornithopter.

Paper received 19 August 1992, revised versions received 24 March 1993 and 13 May 1993, accepted 1 July 1993.
Paper No. 1917.

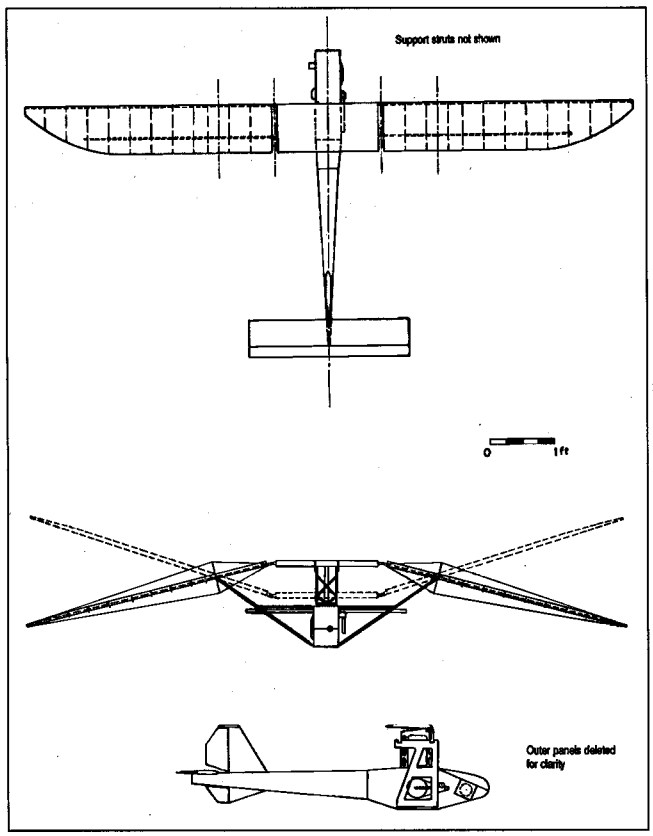

Figure 2. 24 September 1986 version.

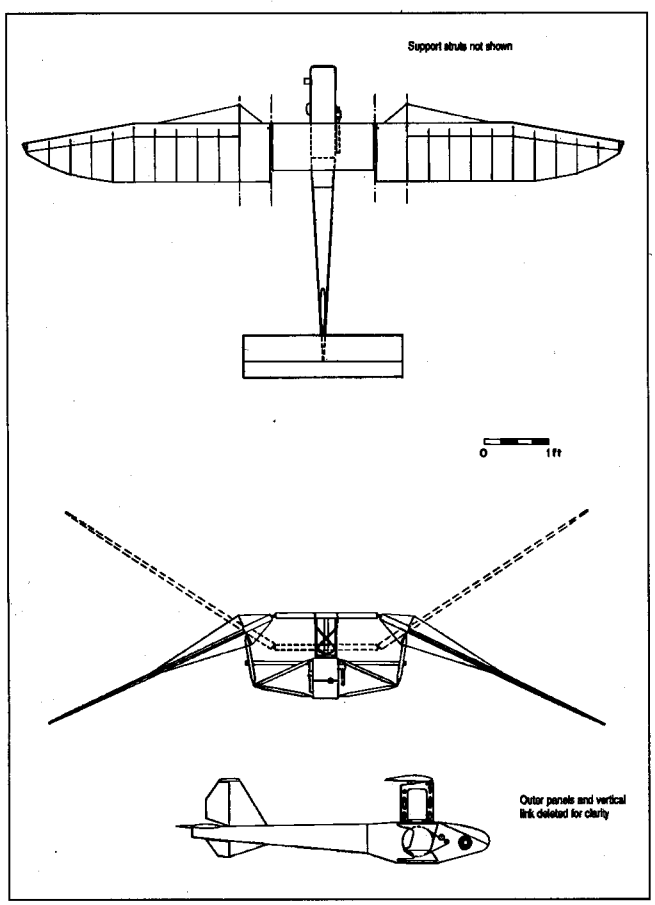

Figure 3. 24 October 1989 version.

augmentation and flight control systems, provided a valuable reinterpretation of the appearance and flight mechanics of these prehistoric creatures. However, as discussed in Ref. 6, the requirement for biological realism and the on-board battery weight did not allow the aircraft to achieve sustained flapping flight.

For full scale piloted flight, the authors are not aware of any successful engine powered ornithopters. However, flights have been achieved with human powered ornithopters, the most successful of which was tested by Lippisch[7] in 1927. This was capable of extended glides, but not sustained flight. Similar performance was also achieved by human powered aircraft tested by Vogel[8] and Hartmann[9]. Clearly, this ancient goal of flight has posed formidable technological obstacles.

The present approach to mechanical flapping-wing flight owes little to the previous examples. As described in Ref. 10, the membrane wing design of the Pénaud-type flappers was found to be too inefficient to be attractive for a larger engine powered aircraft. Also, although it appears to be bird like in its actions, its low advance-ratio, vectored thrust, flight mechanics are quite at variance with those for large birds in level cruising flight. Therefore, it was established that the ornithopter's flapping wings should provide horizontal thrust, with the resulting flight speed acting on the wing's chordwise-rigid camber to generate a mean lift. However, it should be stated that this wing design also differed from birds' wings in several important ways. Early in the project, slow-motion movies of birds in level equilibrium flight were studied in order to gain some insight on typical wing motions. Very little was learned from this because there is a complexity of motions ("tip flip", feather spreading, fore-and-aft swinging, semispan variation, etc) which would be mechanically intimidating if each motion were considered to be of equal importance. Instead, it was hypothesised that the important fundamental kinematics for efficient flight consist of a simple harmonic up-and-down flapping motion accompanied by phased pitching (wing twisting). Further, it was assumed that efficient flapping could be achieved with a constant semispan wing incorporating a smooth-skinned (non feathered) aerofoil.

Finally, it should be noted that the drive mechanism and wing flapping kinematics were also original developments. As discussed further, the lift balancing multipanel wing design was harmonically driven by a lightweight and reliable transmission which reduced the engine's high rotational speed to the low frequency required for the wing's flapping. This approach is different from previous ornithopter practice, and is also unlike the muscle and tendon actions of birds.

WING DESIGN

Figures 2–4 show the various evolutions of the ornithopter. The wing details vary, but in all cases they are characterised by consisting of three hinged panels with chordwise rigid ribs and constant spanwise lengths. The three panel feature, which was invented by Harris, serves to balance the time-varying lift seen by the fuselage. That is, the centre portion of the wing is flapping in one direction while the outer portions are flapping in the opposite direction. Whereas it is not possible to completely balance the inertial and aerodynamic loads for all flight conditions, this tendency to achieve a dynamic balance would be a valuable feature for a human carrying aircraft.

Additionally, for ornithopters of any scale, the three panel wing provides a means for evening out the power required from the engine during the flapping cycle. That is, the engine sizing for ornithopters is determined by the peak power required during the cycle. For traditional two panel designs, the power required for the downstroke may be several times greater than that for the

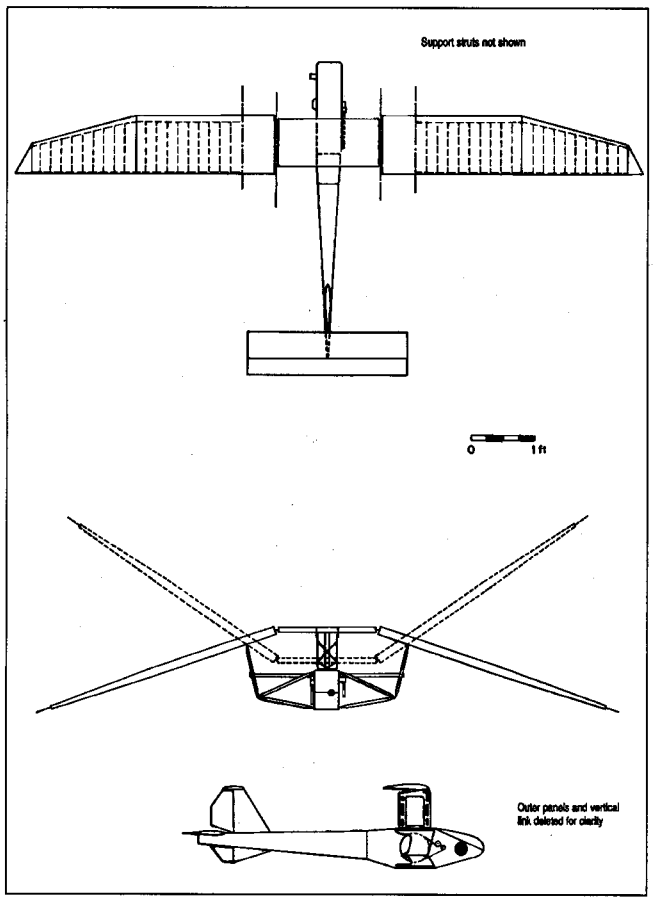

Figure 4. 4 September 1991 version.

upstroke. Therefore, the required engine may be much larger than average power considerations would dictate. This would result in an aircraft heavier than a fixed wing propeller driven aeroplane of comparable performance. Hence, ornithopter designers have sought ways to store energy on the upstroke. For birds and bats, some storage may be provided by their tendons. It is more likely, though, that the upstroke is the period of repose required by the downstroke muscles. Such repose is not needed by mechanical systems, and energy storage has typically used elastic means, such as the bungee cords incorporated into the AeroVironment pterosaur replica. However, an ornithopter isn't required to be a scale model of an animal, and the three panel wing thus provides an attractive means for power evening as well as dynamic balance.

As seen in Figs 2–4, the wing's flapping motion is actuated through the centre panel's vertical oscillation, driven in simple harmonic motion by a mechanism which will be described in the next section. The centre panel is constructed to be rigid in bending and twisting, and incorporates a simple flat-bottom aerofoil (nominally, a Clark-Y). It was originally envisaged that the centre panel would require a direct pitch articulation in conjunction with its vertical (plunging) motion; but it was found, as described later, that it operated most effectively in plunging only.

The outer panels operate in a spanwise-rocking ("seesaw") fashion, driven at one end by hinge connections to the centre panel. There were two systems of support struts and hinges for the outer panels in the course of their evolution, as seen in Figs 2–4. From 1985 to 1987 the strut assembly was rigid, with a single hinge connection to the outer panel. The kinematic requirements were then met by means of spanwise-sliding hinges to the centre panel. That is, the driving hinges on the end of an outer panel had lubricated cylindrical extensions which slid, piston-like, into the centre panel's hollow spar tubes. This proved to be a very reliable

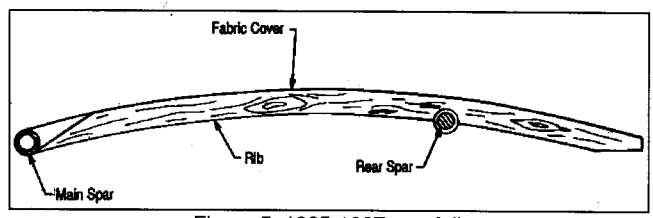

Figure 5. 1985-1987 aerofoil.

system, but it had the aerodynamic disadvantage of producing large, variable, spanwise gaps between the centre and outer panels. Pieces of stretchable fabric were used to cover the gaps; but this, aerodynamically, was not a particularly efficient solution.

In 1989, the support struts were changed to a system incorporating hinged vertical links. These allowed the sliding hinges at the centre panel to be replaced with simple non-sliding units. The gap then remained small and could be aerodynamically sealed with narrow abutting extension strips attached to the end faces of the panels. This system operated reliably during the course of the flight tests in 1989 and 1991.

The outer panels between 1985 and 1987 incorporated a single-surface aerofoil and two spar structure as shown in Fig. 5. Attached to the ribs were short spanwise tubular pieces through which the spars passed. Therefore, the spars were free to rotate within the tubes. The original idea was that since the single surface aerofoil has torsional compliance, the outer panel's pitching distribution could be driven by spanwise rocking of the two spars. This would be accomplished by pitching the centre panel, since the hinges acted as universal joints of the Hooke/Cardan type. The spars would then rock slightly out of phase with each other, directly producing both plunging and pitching distributions along the span. As it turned out, sufficient outer panel pitching was produced by structural deformation alone, and pitching input from the centre panel was not required. It was also determined that the centre panel's relative angles of attack would remain below stall values for plunging only. Therefore, its pitching mechanism was dispensed with from 1986 onwards.

In detail, the outer panel front spar bending resistance was increased by means of bracing wires (as seen in Fig. 2), and the panel's torsional stiffness was determined primarily by the bending stiffness of the rear spar. This was varied considerably during the course of the flight tests by changing the rear spar's length and material. Initially, in 1985 and early 1986, the rear spar was simply a 1/4 in diameter birch dowel extending about halfway along the panel's semispan. There was no analytical guidance for this. It was just a first attempt at what seemed to be a reasonable design.

Later, as it became evident from flight tests and the developing analysis that the wing had excessive torsional compliance, the rear spar was extended and a portion of it changed to a 1/4 in diameter fibreglass rod. In fact, there was a flight test session where the rear spar was a 1/4 in diameter solid carbonfibre rod.

Guided by the analysis, the ornithopter's performance improved steadily during this course of development. However, it was never near to achieving sustained flight. That is, the flight mode was a "powered glide", where the flapping would clearly extend the distance flown compared with the non-flapping cases, but it would not climb or maintain altitude.

The reason, revealed by windtunnel tests[11], was that the actual aerodynamic characteristics fell short of the estimated values used as inputs in the analysis. In particular, the aerofoil had high chordwise drag (C_{df} = 0·063), poor leading-edge suction (η_s = 0·29), and separated flow on one side or the other at all angles of attack. In comparison with modern double surface sections, this aerofoil was a very poor performer (typically, for a Reynolds number of 2 $\times 10^5$, a modern aerofoil should give C_{df} = 0·012 and $\eta_s \approx$ 0·90). It was desired, however, to retain the single-surface feature because of its torsional compliance, and to find ways to improve such an aerofoil's aerodynamic performance.

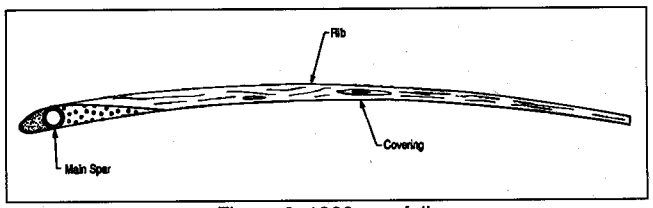

Figure 6. 1989 aerofoil.

As discussed in Ref. 11 and shown in Fig. 6, a candidate section was found. Note the absence of the rear spar. It was decided to rigidly attach the ribs to the front spar, and let the torsional compliance be determined by that spar's characteristics. This has the merit of improved aerodynamic cleanness (measured $C_{df} = 0{\cdot}019$, $\eta_s = 0{\cdot}42$) but one also loses the ease with which the compliance could be changed. Therefore, one has to have a great deal of confidence in the ability of the analysis to accurately predict the performance of the "as built" panel.

Simultaneous with the flight tests and aerofoil experiments, the analysis had been steadily developed, extended, and evaluated with windtunnel tests. As described in Ref. 10, its culmination was a comprehensive computer code named ComboWing which calculates a flapping wing's aeroelastic response and resulting aerodynamic performance. This was used to design a new outer panel, the "Mark-6 wing" shown in Fig. 3. Notice that bending stiffness still required short external guy wires on the front spar. However, the flapping system now used the vertical link arrangement, with the resulting aerodynamically improved smaller gaps between the panels.

The expectation of better performance was borne out by glide tests. However, a series of problems involving control, premature engine cut out, and launching compromised a fair evaluation of the Mark-6 wing in powered flight. It should be mentioned that tests on 24 October 1989 showed climbing flight for the short duration of the engine run (14 s). It was difficult to state, though, that this constituted true sustained flight because the aircraft did not fly far enough to be unequivocally away from the influence of the launching hill's ridge lift.

Flight tests with the Mark-6 wing would have continued into 1990 except that, during this time, a new outer panel design was being developed which promised a very significant performance improvement. Reference 10 describes this new panel, called the "Mark-8 wing", in detail. Briefly, this has a unique, torsionally-compliant, structure with an efficient double surface aerofoil. That is, a split trailing edge feature gives what is, essentially, two single-surface wings lying one over the other and rigidly attached to a common leading edge (described as "Shearflexing"). Therefore, one has the advantage of a single-surface wing's torsional compliance along with the ability to incorporate a modern aerofoil with cross-sectional thickness. The aerofoil used, the S1020 (Fig. 7), was designed especially for this project by Michael Selig (then at Pennsylvania State University) to have a wide angle of attack range for attached flow and high leading edge suction efficiency. Windtunnel tests bore out his predictions ($\eta_s = 0{\cdot}92$) and the Mark-8 wing benefited accordingly. When incorporated on the ornithopter (Fig. 4) the aircraft performed unequivocally sustained and climbing flights, as described later.

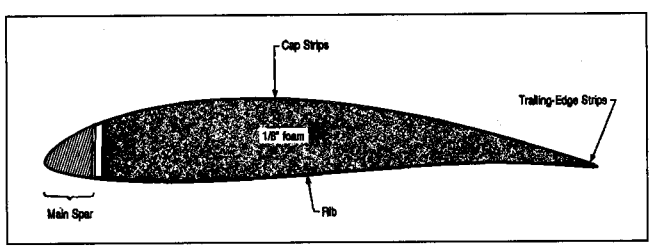

Figure 7. 1991 Selig S1020 aerofoil.

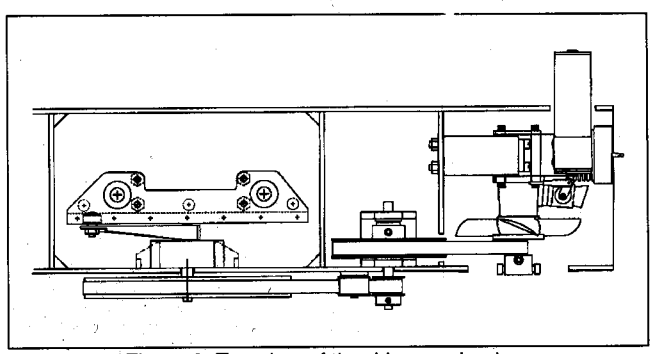

Figure 8. Top view of the drive mechanism.

Finally, it was found from the ComboWing calculations that the Mark-8 panels are "design robust" in the sense that the optimum characteristics lie on a fairly broad plateau where normal construction variations would have small effects on the average thrusts and lifts. This is a valuable feature because even slight aerodynamic asymmetries from the long outer panels would require excessive control trim for straight flight.

DRIVE MECHANISM

The first design goal of the drive mechanism was to convert, in a simple and lightweight fashion, the rotational output of a small internal combustion engine to a 3 in amplitude (6 in peak to peak) vertical sinusoidal oscillation in the range of 3–5 Hz. The second goal was to efficiently couple this oscillatory drive to the centre panel of the three panel wing assembly. If this could be accomplished, the centre panel and strut-supported pivots would take care of passing the driving effort to the outer panels. The mechanical means selected were two stages of fibre-reinforced toothed belting for the rotational reduction, and a scotch-yoke for the conversion from rotation to reciprocation.

The drive underwent several overhauls and modifications during the ornithopter's flight test evolution, but always conformed to the basic configuration illustrated in Figs 8 and 9. The engine is an O.S. Max 45 FSH model helicopter version (enlarged cylinder head for extra cooling capacity) of 0·45 in^3 displacement. Its output shaft carries a cooling fan, the first stage input pulley, and a cylindrical starting collar. Extended socket head set-screws fasten the collar to the shaft and mate with a cross-slotted steel dog mounted on the shaft of a handheld starting motor. This arrangement was found reliable, convenient, and more positive than the conventional rubber friction inserts supplied with handheld electric starters. The engine's measured torque and power characteristics (with the custom built muffler) are shown in Fig. 10, where it is seen that the maximum power output is about 1 hp at ≈ 12 000 rpm and full throttle. Estimates of the maximum instantaneous power required by the ornithopter are shown, in the

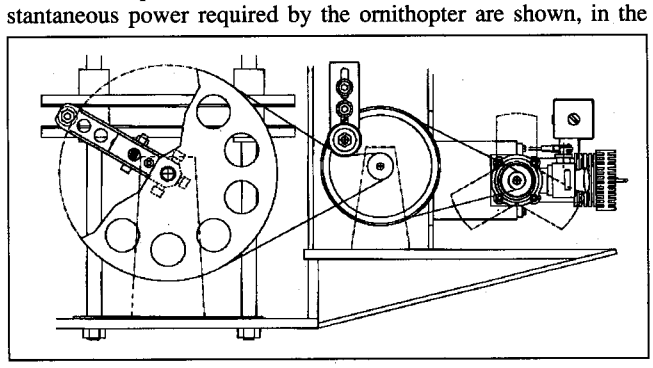

Figure 9. Side view of the drive mechanism.

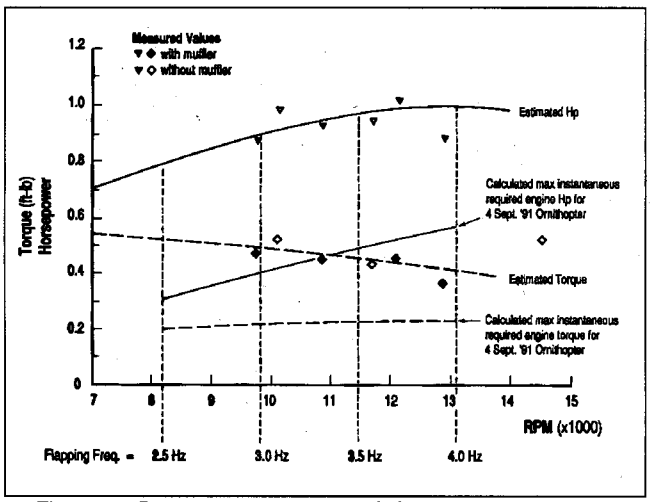

Figure 10. Power characteristics of O.S. Max 45 FSH engine.

lower portion of the graph, to be less than 0·5 hp; thus the engine is adequately sized to provide a comfortable power margin. The fuel used for these power tests, as well as all flight tests, was methyl alcohol mixed with castor oil and 7% nitromethane (marketed commercially as "Apollo 7").

It should be noted that an internal combustion engine was selected because it has a higher power to weight ratio than any alternatives, such as an electric motor with batteries. Also, it was felt that many of the lessons learned in incorporating such a powerplant could be applicable to the drive train design for a full scale ornithopter.

The external second stage belt is wider and coarser pitched than that of the first stage and has an adjustable idler on the slack side to control tension. The scotch-yoke crank and its ball bearings are supported by a hollow plywood box structure affixed to the "thorax" floor and right side (see Fig. 14 for an illustration of main-component designations). At the tip of the crank is a 1/2 in diameter ball bearing roller which runs in the steel tracked slot of a slider unit. This, in turn, reciprocates through a 6 in total stroke on a pair of 3/8 in hollow steel rods affixed at the top and bottom of the thorax. The slider is bolted to the underside of a glass fibre/balsa/carbon "highrise" structure which passes the driving forces to the centre panel's aluminium leading edge spar tube.

Modifications to the drive mechanism were generally in the areas of strength enhancement and ratio increase. During the early flight trials of 1985-86, the 40 DP (diametral pitch) first stage drive belt stripped twice and was replaced with a coarser-pitched belt. A little later the shaft supporting the scotch-yoke crank was remachined from semi-hardened steel after it twisted during a crash load transient. When the wing support arrangement was changed in 1988-89 to incorporate vertical links, there was also a planned increase in flapping amplitude from ±17° to ±30° accompanied by a decrease in frequency from 5 Hz to approximately 3 Hz. The net effect of this conversion was to mandate an increase in drive ratio to keep the engine speed reasonably near its power peak. Additionally, a tradeoff of factors produced higher loads throughout the drive and caused an intolerable amount of tooth-jumping (cogging) at the second stage input pulley. As a result, a series of drive modifications was undertaken. The output pulleys of both stages were enlarged as much as physical space would permit, the belts were widened, the tooth form was changed to a cog-resistant semicircular profile, and the second stage tensioning idler was rebuilt and its foundation reinforced. To combat slot–track scoring and occasional structural damage due to sudden wing stoppages during crashes, the slider was rebuilt using 1/4 in aircraft plywood incorporating steel rather than aluminium roller tracks. For similar reasons the aluminium main crank arm was reinforced with steel near the hub, and the crank-support box and its foundations were strengthened. The final value of the overall drive ratio was 54·5 to 1, composed of 6·67 to 1 in the first stage and 8·18 to 1 in the second stage. Engine rpm at 3 Hz flapping frequency was 9810.

From the outset of the programme, modifications of all kinds were tested with static bench runs. In particular, repaired wings or newly-designed wing panels were flight qualified by enduring a specified amount of static running, usually 20–30 s, at full flight frequency. The frequency was measured by attaching a microswitch where the centre panel would actuate it once per cycle. The switch drove an electronic counter which displayed the period (reciprocal frequency) in seconds.

A critical factor indirectly associated with the drive mechanism was the often vexing problem of simply keeping the engine running after a launch. This difficulty was suppressed for a long time because aerodynamic limitations restricted all flights to the powered glide mode with durations of 27 s or less. However, the two particularly promising flights of 24 October 1989 were cut short by early engine stoppage, and it was recognised that such events were increasingly less tolerable as the capability to sustain flight approached realisation. In June 1991 an extended bench test was run in which the ornithopter was cycled through nose-up and nose-down attitudes and the fuel system components were closely observed. Fuel foaming in the tank and bouncing of the tank's flexible internal intake line were identified as the most likely culprits. Stiffening of the intake line and placement of slosh-damping plastic scouring pad material in the tank cured the engine failure problem in time for the successful flights of the following September.

Although nearly every component in the drive train, and for that matter virtually every part of the ornithopter, was modified or replaced at least once during the flight test series, notable exceptions were the Thomson recirculating ball bushings used in the scotch-yoke slider. These antifriction bushings, the linear equivalent of ball bearings, were originally selected not for wear resistance, but because ultra-low friction was essential to minimise the required depth of the thorax. The higher the slider friction, the larger would have to be the vertical separation of the bushings to avoid binding on the support posts under the eccentric loading of the crank roller. Consequently, the thorax would have to grow deeper to contain the slider over its whole stroke. The ball bushings proved trouble free throughout the vehicle's history.

An important basis for the selection of simple harmonic drive motion was a study by Fairgrieve and DeLaurier[12] which showed that non-sinusoidal flapping would be unlikely to offer aerodynamic advantages. In addition, it was felt that practical difficulties would be likely to arise from the tendency of any finite mass oscillating mechanism to react with sharply increased peak loads to motions containing significant harmonic activity above the fundamental.

It should be noted that even the use of a classical sinusoidal motion generator, such as a scotch yoke, does not assure realisation of the desired output. The "sinusoidality" of the scotch yoke is conditional on a uniform rotation rate at the crank. This, in turn, depends on the response of the drive to the unavoidable variable back loading from the wings. If the loading variation is sufficient to significantly affect the instantaneous rpm of the prime mover, then the output will deviate from simple harmonic motion. The best defence against this problem is a large drive ratio, the beneficial effects of which can be visualised in two complementary ways. Taking the engine's point of view, it has a large (55 to 1) mechanical advantage on the final-drive crank, and also sees the rotational equivalent of the wing inertia diminished by a factor of the squared reciprocal of the drive ratio, or 1/2970 for the subject ornithopter. Looking the other way, the crank sees the small inertia of the engine multiplied by 2970, hence the engine's net flywheel effect is far from negligible. An excellent illustration of the opposite situation occurs with most rubber powered ornithopters. The rubber motor is an almost perfect, inertialess,

torque producer, and is usually connected with no reduction gearing at all. Consequently, the rotation rate at the crank varies both widely and wildly with the rapidly changing instantaneous back loading from the wings. The net result is a sharp, violent snapping at the ends of the wing strokes. Advanced rubber model builders have recognised this problem and devised ingenious remedies such as variable diameter pulleys and multiple wing sets flapping out of phase with each other.

STABILITY AND CONTROL

Since the ornithopter was not required to look identical to a flying animal, it was decided to provide stability and control with a traditional aeroplane-like empennage assembly located aft of the wing. As seen in Figs 2–4, this consists of a stabiliser and fin mounted on the "rear fuselage" which is attached to the thorax. Also, the tail and control surface areas were sized in accordance with typical proportions for fixed wing radio controlled models.

The mass centre was located forward of the estimated neutral point, as is the usual practice for fixed wing aeroplanes. However, note that this is not usually so for Penaud-type ornithopters, which have an aft mass-centre location to give an upward vector to the wing's thrust and to obtain significant lift from the tail. As mentioned in the Introduction, this is not the manner in which large cruising birds fly, nor was this the flight mode chosen for this ornithopter. It was hypothesised that the route to efficient flapping flight was with the thrust vector being essentially horizontal, producing the forward velocity necessary to generate mean lift from the wing. Since this is the same thrust and lift arrangement as for fixed wing aeroplanes, it was assumed that similar trim and static margin requirements apply. It should be mentioned that at the time this design decision was made, there was no stability analysis performed on the ornithopter. Flight tests were counted upon to provide guidance on the workability of this notion. In the event, this basic assumption proved to be correct, although certain adjustments in static margin, decalage, and control surface sizes had to be made, as will be described in the flight tests section.

The flight tests section also describes the Launch computer program, which is a nonlinear three degree-of-freedom simulation of the ornithopter during the launch transient. Such a program gives equilibrium flight information as a special case, and it allowed a confirmation of efficient stable flight for the chosen trim and static margin setups of the 1989 and 1991 configurations.

It should be mentioned that the neutral point calculations are based on the assumption that the wing is fixed at its mean position. That is, although the wing's geometry (and corresponding wake) is continuously varying throughout the flapping cycle, it was assumed that its mean configuration may be used for calculating the aerodynamic centres and downwash angles. In particular, for the wing's aerodynamic centre calculation, ComboWing is used to obtain the mean spanwise twist distributions. Lifting line theory is then used to obtain the corresponding distributions of local lift coefficients. This is done for several values of flapping axis angles with respect to the flight direction so that the local lift–curve slopes, $C_{L\theta}$, may be calculated. This information, along with the wing's geometry, allows the calculation of the aerodynamic centre from:

$$x_{ac} = \frac{\int_0^{\frac{b}{2}} C_{L\theta}\xi c \mathrm{d}y}{\int_0^{\frac{b}{2}} C_{L\theta} c \mathrm{d}y}$$

For the 1991 wing incorporating the Mark-8 panels, it was calculated that $x_{ac}/\bar{c} = 0{\cdot}315$, where $\bar{c}$ is the mean aerodynamic chord (9·86 in) and x_{ac} is measured aft from the most forward leading edge position.

The downwash was calculated by using the method described in Ref. 13, with the wing positioned at its mean flapping angle. Standard aeroplane methods were also used for estimating the stabiliser's and fuselage's influence on the neutral point calculations. The result for the 1991 ornithopter was a neutral point located 5·83 in aft of the rotational axis of the scotch yoke crank (the centre of the last pulley). Since the mass centre is 0·39 in aft of this point, one obtains that this aircraft has a generous static margin of 55%.

The trim condition required a decalage (based on chord lines) between the centre panel and stabiliser of 6°. However, note that the effective decalage is less because of the washout produced by the wing's mean spanwise twist distribution.

As for lateral stability, it was particularly important for this to be inherent because the ornithopter has no direct roll control from ailerons. This was accomplished by giving a mean dihedral to the outer panels; that is, the upstroke flapping angle is larger than the downstroke angle. For the 1991 aircraft, this mean value is 7·09°. As with the longitudinal stability setup, this dihedral angle was chosen based on the assumption that the proportions and angles for stable fixed wing aeroplanes would also be appropriate values for the mean geometry of the ornithopter.

Dihedral is also important for turning, which is achieved by the roll/yaw coupling produced through rudder deflection in conjunction with wing dihedral angle. Additionally, the angular displacement of the flapping outer panels gives a large effective vertical area against which the rudder moment may act to produce a turning force. As discussed in the next section, when the ornithopter had flights of sufficient duration so that its turning behaviour could be evaluated, its performance proved to be very satisfactory and comparable to stable and controllable fixed wing radio controlled models.

FLIGHT TESTS

The chronology of the flight tests is given in Appendix A. These, in fact, were the focus of this work. The analyses and laboratory experiments were in support of the flight tests, and would be performed only to the amount required to give confidence for a flight attempt. As it turned out, it required six years of effort before sustained flight was achieved. However, these tests provided the motivation for, and the most demanding assessment of, this research into the feasibility of mechanical flapping-wing flight.

Although ornithopter design details and certain support personnel changed during the course of the flight tests, the basic methodology remained the same: the aircraft was started while supported on a portable work stand, and then hand launched off a hill (or ridge) into a wind. Note that the ornithopter had no means for stopping the engine with the outer panels at a guaranteed positive (stable) dihedral angle, so it was necessary to land while flapping. Additionally, the landing gear had been removed in order to reduce weight and drag. Since the wingtips extend below the fuselage and could contact the ground at full downstroke, it is easy to imagine that such landings would be damaging. As it turned out, this posed no practical problem. If the throttle was cut back just before touchdown, the aircraft usually landed with no injury to its structure or mechanism. This is not necessarily a recommended procedure for an operational ornithopter, but it did turn out to be acceptable for this research aircraft.

The first flight tests were on 3 October 1985, and they affirmed certain of the crucial basic assumptions discussed earlier. First of all, during these short, straight flights the aircraft was stable with no perceptible fuselage heaving or pitching. This assuaged concerns regarding the workability of the wing's three-panel balance as well as effects of its unsteady shed wake on the tail.

Second, it was clear that the wing's flapping was extending the glide. This affirmed the notion that its horizontal thrust could produce the velocity required for lift, without the flapping, itself, significantly reducing the mean lift. Because a weakness of the front spars' bracing wires required the flapping frequency to be kept below 4 Hz, it was assumed, then, that successful flight only required stronger wires capable of withstanding 5 Hz.

Several changes were made prior to the next flight tests. First, thicker, stranded, wing bracing wires were installed. Second, because the outer panels appeared to have adequate aeroelastic twisting without any required articulation from the centre panel (as discussed earlier), the pitching mechanism was removed and the centre panel was mounted rigidly to the highrise. Third, because full up-elevator had been required to achieve longitudinal trim during the 1985 flights, the stabiliser was changed. That is, the original stabiliser had been built with a cambered, flat bottom aerofoil in accordance with usual free flight aeromodelling practice. This was replaced with a stabiliser of equal area incorporating a symmetrical section (RAF 27), which thus increased the decalage.

The next flights took place in June 1986, and a new problem became evident. Soon after launch the ornithopter's flight path diverged and it spiralled into the ground. Although pilot inexperience might have been a factor, it was judged that the aircraft's lateral stability was inadequate despite its high wing configuration. At this time, the wing had no mean dihedral. That is, the midstroke flapping angle was zero. Therefore, along with repairing the extensive crash damage, the support strut geometry was changed to give a midstroke flapping angle of 2°.

The repaired and modified ornithopter was next flown on 17 September. Several launches were made, but the aircraft had a perverse left turn tendency. This had nothing to do with spiral instability, for throttling back would allow recovery. It was clearly a thrust asymmetry, and field corrections were attempted by increasing the rudder area and diverting the lateral cooling fan flow at the nose. Finally, straight, full throttle flight was achieved; but it was evident that the ornithopter was not capable of sustaining such flight.

At this time, the flapping wing analyses were being developed. The aerodynamic model had been derived, as described in Ref. 6, and coded in a program called Flapping. A separate program, named Dynflex, calculated the aeroelastic response of the two spar outer panel. The information from Dynflex was incorporated into Flapping to predict the outer panel's average lift, thrust, and propulsive efficiency. It was found that a significant performance improvement could be achieved by stiffening the outer panels' rear spars, and these changes were made before the next flight tests on 24 September.

The ornithopter flew well, achieving the longest duration yet (26 s). In fact, a significant portion of the flight was at nearly the same altitude as the launch point. It only seemed to descend because the first stage drive belt kept stripping its teeth (evidence that the drive mechanism would have to work harder as the outer panels' efficiency increased). It was tempting, at this point, to claim successful sustained flight. However, the authors had established a criterion that success could only be claimed if the ornithopter flew higher than the launch point and performed a discretionary landing.

The major modification before the next flight tests was to strengthen the first stage drive, as described in the drive mechanism section. This gave no problems during the 1987 series of flights, but it also became evident that the ornithopter was still not capable of sustained flight. That is, although numerous tests were made during 1987, only one flight had longer duration (by one second) than that attained on 24 September 1986. The rear spar stiffness was tinkered with in various ways, but it was clear that the aircraft's aerodynamic efficiency had to be reassessed.

Glide tests showed slopes less than 4:1, which is much poorer performance than one would calculate from standard aeroplane drag polar methods. A windtunnel test of the ornithopter minus its outer panels gave fairly high drag values (0·832 lb at 46 ft/s), but it was found that the major shortcoming was in the assumed aerodynamic efficiency of the outer panels' aerofoil. The windtunnel experiments described in Ref. 11 showed that the attached flow angle of attack range and leading edge efficiency had been greatly overestimated. When the corrected values were used in the analysis, the predicted performance confirmed the flight test results. Therefore, a major redesign of the outer panels and support struts was undertaken, resulting in the Mark-6 wing described previously.

The design, construction, and windtunnel testing of the Mark-6 panels took all of 1988. Bench runs also revealed the need to strengthen the drive mechanism and the centre panel. Therefore, flight tests with the new outer panels did not occur until 1989. The first series, in June, was basically a disaster. The new wing didn't really have a chance to be evaluated because of poor launches (13 June) and inadequate elevator power (19 June). On the two occasions when it did pull out, the engine immediately quit. In truth, the expression "ground-breaking research" acquired additional meaning for this project. However, there was one glide test which confirmed the aerodynamic improvement provided by the Mark-6 panels, in that the measured slope was in excess of 6:1.

During repairs it was seen that the elevator control horn had loosened. It was not known if this occurred because of the crash, or was the cause of the ornithopter's failures to pull up from the launch. However, it did serve to focus attention on the strength and operation of the controls. Besides making the horn mounting and its control runs more robust, the torque outputs of the servomechanisms were measured and found wanting in comparison with calculated hinge moments. Therefore, the original radio control system (Kraft Series Seventy-Seven) was replaced with a Futaba FP. The ornithopter, minus the outer panels, was placed in a windtunnel and the controls were found to be capable of full actuation at a speed of 52 ft/s, which is higher than the estimated cruise speed of 45 ft/s. At this same time, the drag was remeasured and found to be 0·63 lb, which scales to 0·47 lb at 45 ft/s. It was clear that the new, more streamlined, support struts gave a lower overall drag despite the larger second stage external pulley.

The launching technique was also given attention. A nonlinear three degree-of-freedom computer simulation was developed in order to study the launch transient, identifying optimum release techniques and post launch control strategies. Figure 11 shows a representation of the mathematical model, and Fig. 12 shows a typical trajectory from the program (named "Launch"). It was found that a successful launch could be obtained with a level release at speeds of about 25 ft/s, low flapping frequencies, and full up-elevator. Immediately after, the frequency should be

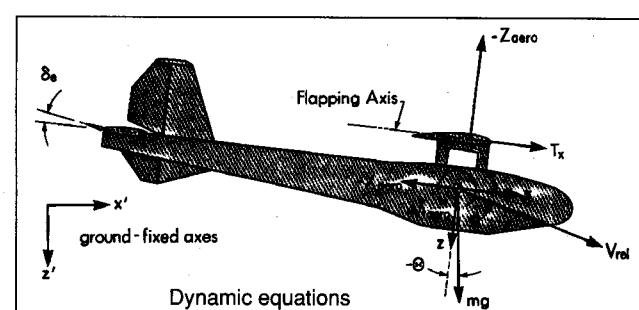

Dynamic equations

$$X_{aero} - mg\mathrm{Sin}\Theta + T_x = m\left(\dot{U} + QW\right)$$

$$Z_{aero} + Z_c + mgCos\Theta = m\left(\dot{W} - QU\right)$$

$$M_{aero} + M_c + T_x z_t = I_{yy}\dot{Q}$$

Figure 11. Physical model for nonlinear flight simulation.

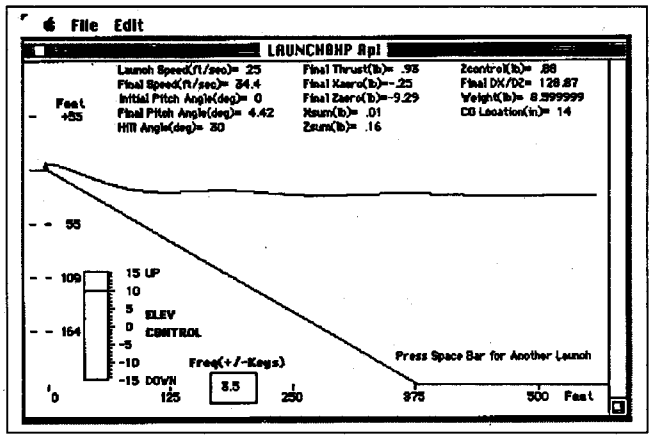

Figure 12. Typical launch trajectory from flight simulation.

increased while the elevator angle is brought back to zero. Note that the simulation's predictions are conservative in that ridge lift and head winds are not modelled.

Additionally, a plywood mockup of the ornithopter had been constructed and launch tests were performed in order to gain experience with attaining the strong level throws dictated by the simulation. This proved to be a valuable training tool as well as a means for obtaining launch speed data.

These efforts paid off on 24 October with two excellent launches. For the first time, the ornithopter rose higher than the launch altitude and appeared to be sustaining. However, the engine prematurely failed in both cases, so the landings did not meet the criterion of being discretionary. Also, it was unclear if the ornithopter flew free of ridge lift, so unequivocal success could not be claimed. It appeared then that a solution to the engine failure problem (which had plagued this project off-and-on from 1985) was now the top priority.

This was dealt with by increasing the first stage drive ratio and improving the fuel feed. Meanwhile, a new windtunnel rig had been developed[10] which allowed a flapping Mark-6 outer panel to be tested for average lift and thrust. The results showed that the ornithopter would only have marginally sustained flight. At the same time the development of the Mark-8 wing showed such promise that it was decided to make no further flights with the Mark-6 wing. Instead, the ornithopter was preserved for tests with the new wing.

The Mark-8 wing was ready by June 1991, having undergone windtunnel tests which confirmed its performance potential[10]. Also, both bench runs and run ups at flight speeds on a truck mounted rig were conducted to proof test the wing structure, drive mechanism and fuel feed system. The ornithopter was then ready for flight testing, and the opportunity for this occurred on 4 September.

The location was near Newton-Robinson in rural Ontario (about 30 miles north of Toronto). The winds were from the north at approximate speeds of 5-15 mph, and the aircraft was launched from the top of a northward facing ridge. Both launches were excellent, smooth and level; and in both cases the ornithopter climbed and performed sustained flight (shown in Fig. 13) until it was decided to land. The pilot kept the elevator angle initially at zero, planning only to increase it as required. As it turned out, the initial up-elevator suggested by the Launch simulation was not needed, probably because of ridge-lift effects.

The flight duration was limited only by the amount of on board fuel, which is a maximum of 4 oz. Since a fair amount of run up was performed before the first launch, it was decided to land before the tank emptied. If that occurs, the wing might lock at an unstable flapping angle. Therefore, the first flight was 1 min 46 s. The second flight was longer, at 2 min 46 s.

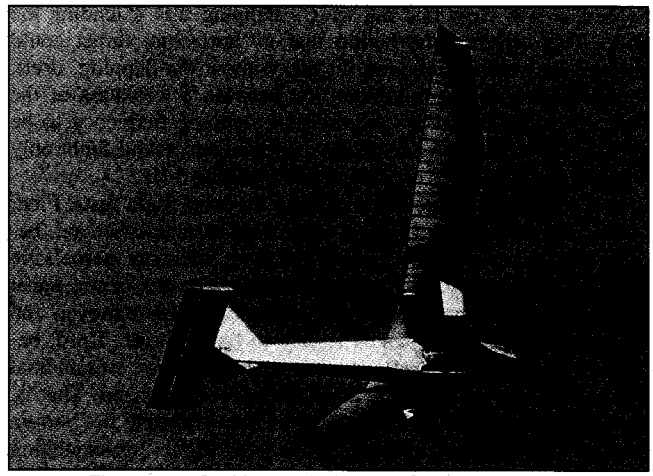
Figure 13. Ornithopter in flight, 4 September 1991.

The durations were long enough to adequately evaluate the ornithopter's performance, stability and control. The flight videos showed speeds of approximately 50 ft/sec at flapping frequencies from 3·0 to 3·8 Hz (averaging 3·3 Hz). According to the pilot, these evidently exceeded the minimum conditions for level flight. The aircraft was flown "hot", staying at altitudes below 300 ft for documentation by the ground based cameras. Therefore, the previously predicted minimum flight conditions of 45 ft/s at 3 Hz are probably valid.

Turns were attempted, for the first time, and these were executed smoothly and easily with no unstable tendencies. The rudder worked with the mean dihedral, as designed, to give the required bank angles. A slight amount of asymmetrical thrust was readily compensated for with rudder trim. The longitudinal stability was likewise very good, confirming the adequacy of the chosen static margin. The elevator trim for level flight was found to be essentially zero, as calculated. In all, the ornithopter appeared to be inherently stable.

When in flight, there was no perceptible fuselage heaving or pitching in response to the flapping. Undoubtedly, there is some unbalanced force imposed on the fuselage; but the three-panel wing apparently worked at reducing this. In fact it was striking, looking at the videos, how smoothly the ornithopter flew.

Finally, both landings were very satisfactory, with no damage for the first one, and only slight damage to the subrudder for the second. If required, that could have been a field repair.

CONCLUDING REMARKS

The flights of 4 September graphically demonstrated the feasibility of this particular approach to engine powered flapping wing flight. It is readily acknowledged that there may be other solutions for attaining this; but the ornithopter design resulting from this work has certain technologically attractive features. First of all, the wing design operates very efficiently because the Shearflex feature allows it to incorporate a thick, modern, aerofoil with a wide attached-flow angle of attack range and high leading-edge suction efficiency. Next, the three-panel feature substantially reduces two of the main design problems for ornithopters, namely the unbalanced lift imposed on the fuselage and the difference between downstroke and upstroke power. Further, a drive mechanism was found that was lightweight, reliable, and capable of delivering simple harmonic motion to the wing. Note the important fact that the drive reduction provided such an apparent back inertia at the engine that no flywheel had to be added. That is, the engine was able to run as comfortably through its throttle range as if it were rotating a propeller.

The notion that the ornithopter's stability and control is determined by its mean configuration was confirmed. That is, the usual geometric and mass balance criteria which stabilise a fixed wing aeroplane were shown to be also appropriate when applied to the ornithopter's time averaged geometry. It is worth noting at this point that flapping wing aerodynamics could have had several unpleasant surprises to nullify that notion, such as strong unsteady wake effects on the stabiliser and significant mean lift loss with flapping frequency. In the event, these problems did not occur.

The control sizes were proportioned somewhat large as dictated by flight test experience. The 1989 flights had shown an apparent requirement for a strong low speed nose-up pitching moment during launch; and this was provided for with a generously sized elevator. Even though the 1991 flights did not utilise this full capability, it could be needed for launches into weaker winds. The rudder was enlarged during the 17 September 1986 flights to correct a strong turning tendency. Even though that amount of rudder power was never again required, the enlargement was retained because of the possibility of asymmetrical thrust from the two outer panels. The 1991 flights, however, appeared to confirm the predicted "design robust" feature of the Mark-8 panels in that even when hand constructed by two different workers at two different times, they performed very nearly in concert.

It must be noted that although the three-panel wing works towards providing a lift balance, it will generally never achieve this perfectly. Therefore, the fuselage will always experience some oscillation at the flapping frequency. Furthermore, the three-panel design requires support struts, with their corresponding weight and drag. Additional weight, as well as mechanical efficiency loss, is likewise a consequence of an ornithopter's drive reduction system compared with a simple shaft mounted propeller.

Serving to offset these losses, however, is the flapping wing's large actuator area. The high efficiency of a large diameter, slowly rotating propeller is well known. A flapping wing offers the same aerodynamic advantage, imparting small velocity increments to a large amount of air. Since this is also the requirement for a low aeroacoustic signature, ornithopters therefore hold the promise of being the quietest powered aircraft.

The analytical foundation and structural design resulting from this work should be applicable to the design and construction of a full scale aircraft. That is, this particular solution to mechanical flapping wing flight appears to be capable of being scaled up to a human carrying engine powered ornithopter. There would be considerable development involving takeoff techniques and drive mechanism design, but a major result from this research is that such an achievement is now feasible.

Finally, although this work has concentrated on an ornithopter designed for cruising flight, it is interesting to speculate that a future advanced flapping wing aircraft might be capable of both efficient Vstol and high speed subsonic flight. This would require a major research and development effort involving mechanisms and wing articulation drives; but note that the basic requirement for a large actuator area is inherent in the ornithopter's design.

ACKNOWLEDGEMENTS

This project was primarily funded by the authors, with support for certain incidental expenses provided by the Natural Sciences and Engineering Research Council. Funding was also obtained from Exhibitions Canada, during 1991, which allowed the completion of the ornithopter in time for the 4 September flights. These were filmed by the Canadian National Film Board for incorporation into an IMAX movie, *Momentum*, shown at Expo 92.

Furthermore, this project has benefited greatly from the enthusiastic help of several volunteers. During the course of this long project, the pilots have been Donald Uffen, Sunjoo Advani, and Eric Edwards; and the launchers have been Darius Mavalwalla, Christopher Lewis, and David Loewen. Continuous help, both in the lab and for the tests, has been provided by research engineers William McKinney and Eric Edwards, along with Sing Wong, Henry Kwok, and David Loewen.

Also, several individuals have stepped forward at crucial times to provide their expertise. These include Gus Rinnella with his materials knowledge, Marcus Basien with his wing construction ideas, James Winfield with his skill at both still and video photography, Brian Alsop with his key idea for fuel-slosh damping, and William Unger who made the structures lab available for load testing the vertical struts.

Special thanks go to Michael Selig who, because of his interest in the project, designed the excellent S1020 aerofoil which performed so well on 4 September 1991.

Finally, acknowledgement should be given to those who always seemed available to help in any way needed, such as carrying equipment to flight test sites, handling photography and videography, obtaining food and materials, etc. These include Chris Hayball, James Lowe, Matthew Malone, Darin Graham, Susan Haigh, Justin Amann, David Ahier, Karl Stoll, and Roland Lorenz. This accomplishment is shared by all listed.

REFERENCES

1. SCHOENKY, P. Ornithopters, *1951-52 Model Aeronautic Year Book*, ZAIC, F. (ed) Model Aeronautic Publications, New York, 1952, pp 188-90.
2. GIBBS-SMITH, C. H. The Eighteen Seventies and Eighties, *A History of Flying*, B.T. Batsford, London, 1953, p 172.
3. HERZOG, K. Demonstration des Tierfluges an Hand von Vogelmodellen und Schwingenflugapparaten, *Anatomie und Flugbiologie der Vögel*, Gustav Fischer Verlag, Stuttgart, 1968, pp 136-169.
4. DWIGGINS, D. Flapping wings... Spence's secret life, *Sport Av*, August 1977, pp 19-22.
5. BROOKS, A.N., MACCREADY, P.B., LISSAMAN, P.B.S. and MORGAN, W.R. Development of a wing-flapping flying replica of the largest Pterosaur, AIAA Paper 85-1446, 1985.
6. DELAURIER, J.D. An aerodynamic model for flapping-wing flight, *Aeronaut J*, April 1993, **97**, (964), pp 125-130.
7. LIPPISCH, A.M. Man Powered Flight in 1929, *Aeronaut J*, July 1960, **64**, pp 395-398.
8. BERANEK, L. Der Schwingenflug, eine Technische Realitat, *Deutsche Flugtechnik*, 1959, Bd 1.
9. Man-powered aircraft a-coming, *Sci Mech*, April 1960, pp 106-108.
10. DELAURIER, J.D. The development of an efficient ornithopter wing, *Aeronaut J*, May 1993, **97**, (965), pp 153-162.
11. DELAURIER, J.D. An experimental study of low-speed single-surface airfoils with faired leading edges: In *Low Reynolds Number Aerodynamics*; Proceedings of the Conference, Notre Dame, Indiana, Springer-Verlag, Berlin, 1989, pp 161-173.
12. FAIRGRIEVE, J.D. and DELAURIER, J.D. Propulsive performance of two-dimensional thin airfoils undergoing large-amplitude pitch and plunge oscillations, UTIAS Technical Note No 226, July 1982.
13. Royal Aeronautical Society, Data Sheet Aircraft 08. 01. 04.

APPENDIX A: CHRONOLOGY OF FLIGHT TESTS

3 October 1985
Location: Morningside Hill, Scarborough, Ontario
Pilot: Donald Uffen
Launcher: James DeLaurier
Flight 1: powered, 12 s. Flight 2: powered, 13 s. Flight 3: glide, 8 s

9 June 1986
Location: Morningside Hill, Scarborough, Ontario
Pilot: Donald Uffen
Launcher: James DeLaurier
Flight 1: powered, 5 s (crashed*)

14 June 1986
Location: Morningside Hill, Scarborough, Ontario
Pilot: Donald Uffen
Launcher: James DeLaurier
Flight 1: glide, 12 s. Flight 2: glide, 8 s. Flight 3: powered, 13 s (crashed).

17 September 1986
Location: Morningside Hill, Scarborough, Ontario
Pilot: Sunjoo Advani
Launcher: James DeLaurier
Flight 1: powered, 9 s. Flight 2: powered, 8 s. Flight 3: powered, 9 s.
Flight 4: powered, 12 s. Flight 5: powered, 12 s. Flight 6: powered, 9 s (crashed).

24 September 1986
Location: Morningside Hill, Scarborough, Ontario
Pilot: Sunjoo Advani
Launcher: James DeLaurier
Flight 1: powered, 21 s. Flight 2: powered, 26 s.

4 June 1987
Location: Mono, Ontario
Pilot: Sunjoo Advani
Launcher: James DeLaurier
Flight 1: powered, 16 s (crashed).

13 June 1987
Location: Newton-Robinson, Ontario
Pilot: Sunjoo Advani
Launcher: James DeLaurier
Flight 1: powered, 12 s.

15 June 1987
Location: Newton-Robinson, Ontario
Pilot: Sunjoo Advani
Launcher: James DeLaurier
Flight 1: powered, 27 s. Flight 2: powered, 6 s. Flight 3: powered, 9 s.
Flight 4: powered, 13 s. Flight 5: powered, 15 s. Flight 6: powered, 12 s.

21 September 1987
Location: Mono, Ontario
Pilot: Eric Edwards
Launcher: James DeLaurier
Flight 1: powered, 3 s. Flight 2: powered, 13 s. Flight 3: powered, ≈ 8 s.

22 September 1987
Location: Newton-Robinson, Ontario
Pilot: Eric Edwards
Launcher: James DeLaurier
Flight 1: glide, 6 s. Flight 2: glide, 6 s. Flight 3: glide, 8 s
Flight 4: powered, 8 s. Flight 5: powered, 10 s. Flight 6: powered, 1 s.
Flight 7: powered, 8 s. Flight 8: powered, 21 s. Flight 9: powered, 18 s.

13 June 1989
Location: Newton-Robinson, Ontario
Pilot: Eric Edwards
Launcher: James DeLaurier
Flight 1: glide, 3 s. Flight 2: powered, 2 s. Flight 3: powered, 9 s.
Flight 4: powered, 2 s (crashed).

19 June 1989
Location: Mono, Ontario
Pilot: Eric Edwards
Launcher: Darius Mavalwalla
Flight 1: glide, 13 s. Flight 2: powered, 8 s. Flight 3: powered, 3 s (crashed).

24 October 1989
Location: Mono, Ontario
Pilot: Eric Edwards
Launcher: Christopher Lewis
Flight 1: powered, 26 s. Flight 2: powered, 23 s (crashed).

4 September 1991
Location: Newton-Robinson, Ontario
Pilot: Eric Edwards
Launcher: David Loewen
Flight 1: powered, 1 min: 46 s. Flight 2: powered, 2 min: 46 s.

Total powered flights = 38
Total glides = 8
* "crashed" means that the damage was too extensive for a field repair.

APPENDIX B: COMPONENT BREAKDOWN OF THE 4 SEPTEMBER 1991 ORNITHOPTER

Figure 14 shows a cutaway perspective drawing of the 4 September 1991 ornithopter. Compared with the 3 October 1985 aircraft which weighed 6·5 lb, this version weighs 8·7 lb. As discussed in this article, these increases were due to modifications for improving performance and reliability. The specific component breakdown is given below:

Component	Primary Materials	Mass (g)
Outer panels (including hinge fittings)	Kevlar/carbon/foam/balsa/ plywood/plastic/aluminum/ steel	590
Centre panel	Kevlar/carbon/aluminum/ balsa/Mylar	184
Support struts (with pins)	plywood/foam/fibreglass/ steel/brass	480
Vertical links (with upper pins)	carbon/plywood/steel/brass	116
Thorax (including drive mechanism and radio control, but no fuel)	steel/aluminum/plywood/balsa/ fibreglass	2319
Rear fuselage	balsa/plywood/Kevlar/Mylar	190
Stabiliser & fittings	balsa/plywood/Mylar/plastic	83
	Total:	**3962 g (8·74 lb)**

The wing area is 7·69 ft^2, so the wing loading is 1·14 lb/ft^2.

*Editors note: Two previous papers by Professor DeLaurier concerning his work on ornithopters were published in the April (**96** (964)) and May (**96** (965)) issues of* The Aeronautical Journal.

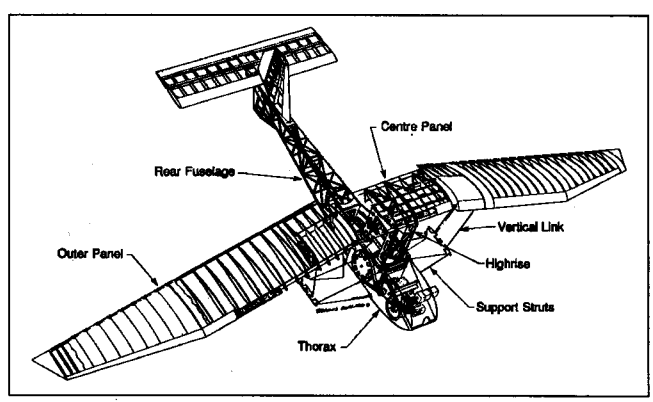

Figure 14. Sectional drawing of 4 September 1991 ornithopter.